Assembling - Maintenance

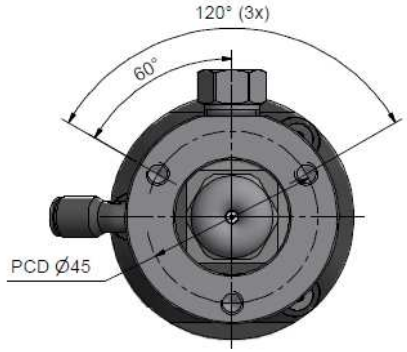

This drawing is appendix A of the installation and maintenance instruction *"Cutting head type IV 2.0"*.
Complete installation and maintenance instruction refer to QR-Code or:
https://www.allfi.com/en/services/downloads/product-manuals/

- Pneumatic-cylinder must be pressurised with air during assembling and disassembling of valve case and collimation tube.
- Stroke has to be 0.6 - 0.8 mm / 0.0235 - 0.0315", air pressure 7bar - 100 psi, adjustment range +/- 1 revolution.
- Function test with several open and closed cycles.
- After finishing maintenance flush the complete cutting head without nozzle at < 500 bar / 7200 psi.
- Pressure relief holes must not be covered or closed.

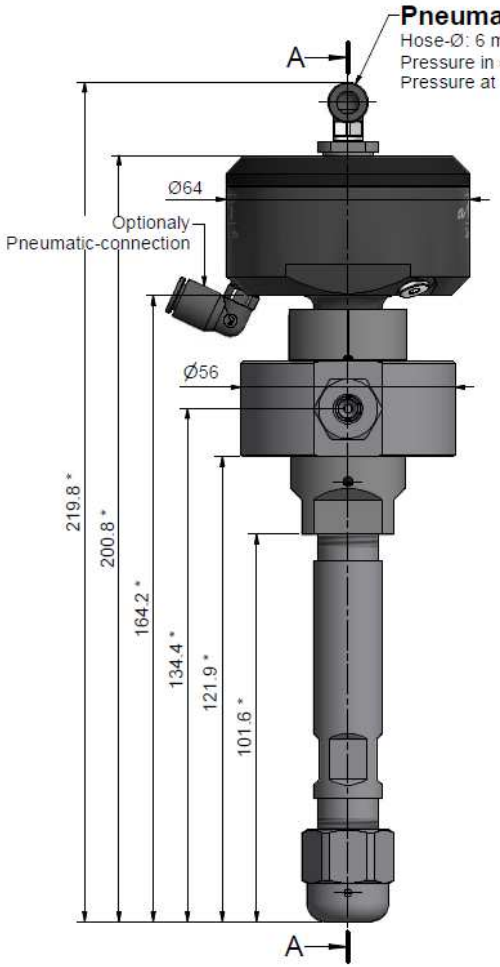

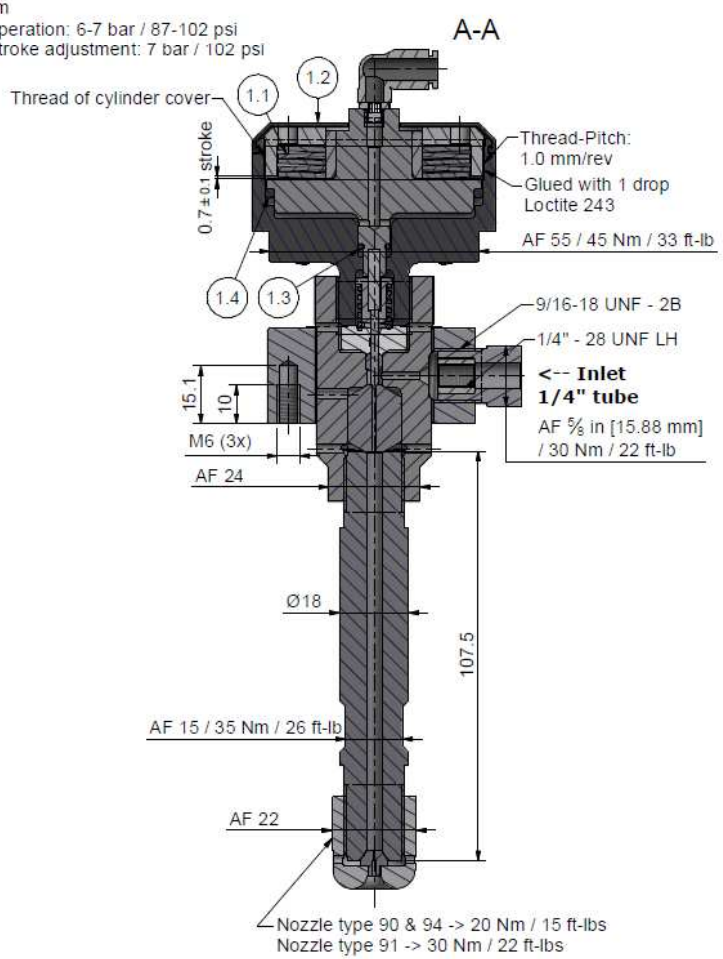

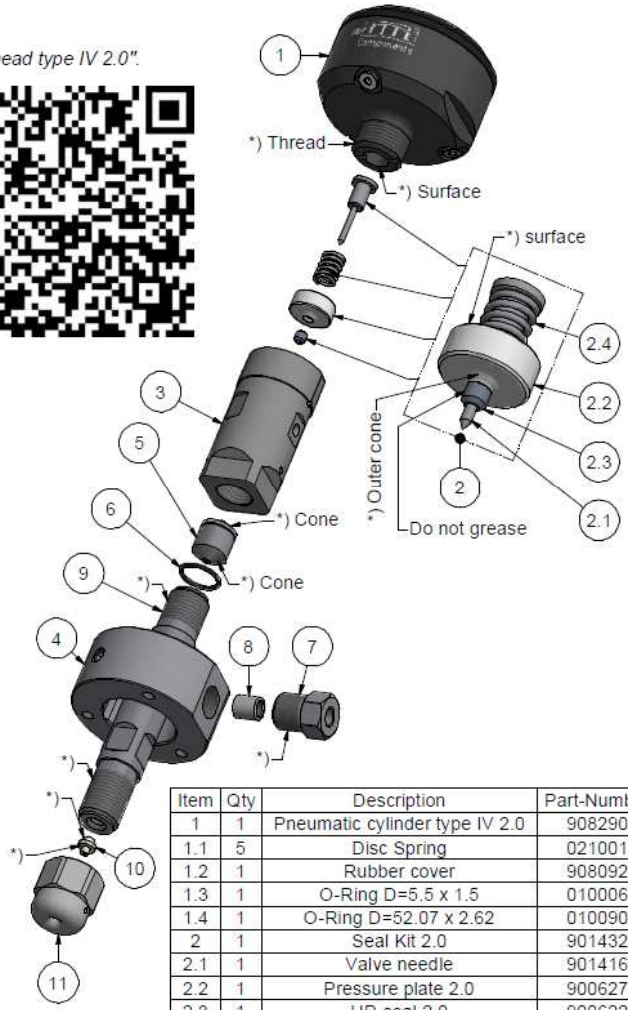

*) -> Assembly-Grease DX
Allfi-Art.: 051055

Item	Qty	Description	Part-Number	Comments	Weight
1	1	Pneumatic cylinder type IV 2.0	908290		340.2 g
1.1	5	Disc Spring	021001		14.3 g
1.2	1	Rubber cover	908092		3.9 g
1.3	1	O-Ring D=5.5 x 1.5	010006		0 g
1.4	1	O-Ring D=52.07 x 2.62	010090		0.9 g
2	1	Seal Kit 2.0	901432	Wear part	15.6 g
2.1	1	Valve needle	901416		3.1 g
2.2	1	Pressure plate 2.0	900627		11 g
2.3	1	HP-seal 2.0	900622		0.1 g
2.4	1	Compression Spring	021006		1.4 g
3	1	Valve case 2.0	908010	Wear part	235.2 g
4	1	Coupling Ring 1/4" Imp	900074-I		309.1 g
5	1	Valve Seat	900014	Wear part	17.2 g
6	1	O-Ring D=14 x 1.5	010013		0.1 g
7	1	Gland Nut 1/4" Imp	701407		22.8 g
8	1	Collar 1/4"	711403		3.1 g
9	1	Collimation tube - L107.5	900052	Wear part	178 g
10	1	Orifice Type 94	0094xx	Not included	1.1 g
11	1	Orifice Cap M16 x 1.5	900060		47.1 g

General tolerances ISO 2768-1 m

Designs and drawings created and produced by the contractor are the contractor's intellectual property and may only be used for the purposes of the order.

Weight 1.17 kg

Amendment:

Replace for	-	
Replaced by	-	
Drawn	25.07.2023	AM
Checked	26.07.2023	BT
Release	26.07.2023	BT
Index-release		

Cutting head type IV 2.0 PWJ Imp

Scale 1 : 1

Max. 4150 bar / 60,000 psi

allfi Components
ALLFI AG - RIEDENMATT 1 - CH-6370 STANS
PHONE +41(0)41-618 05 05
E-MAIL: sales@allfi.com http://www.allfi.com

908200-I

Index -

Sheet-No. 2
No. of sheets 2

Note *
All dimensions refer to nozzle type 90 & 94.
When using type 91 all dimensions will increase by 2.5mm